Department of Computer Science and Engineering, BRAC University

Lecture 10

Register Basics and Memory Unit

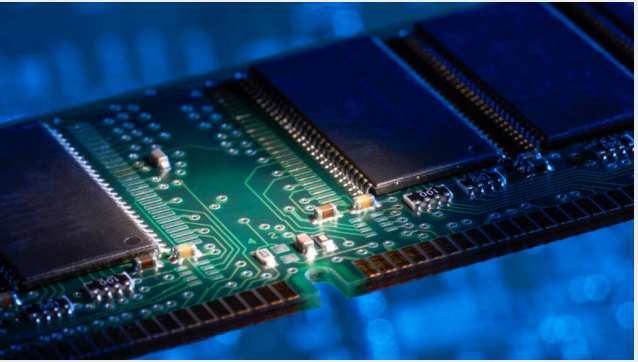

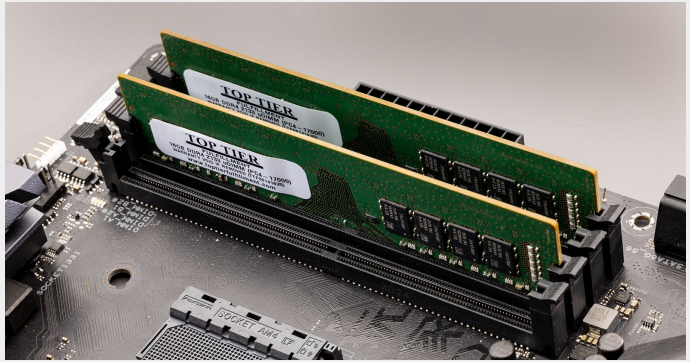

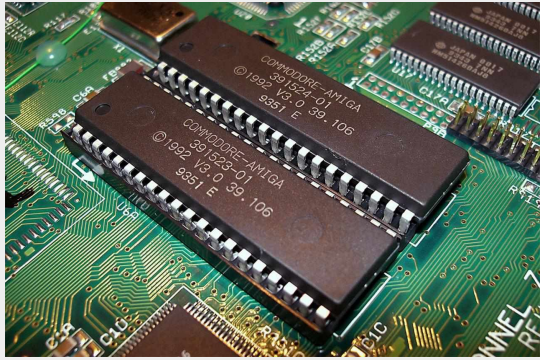

CSE260 : Digital Logic Design

Registers

- Flip-flops can only store 1-bit of data
- Multiple flip-flops can be combined into a single group which is called a register
- A register can store multiple bits
- An n-bit register is consist of n flip-flops and different logic gates, it can store n-bit information
- The flip-flops in a register store information
- The logic gates and other components control the insertion and the flow of the data
- Functions of register
  - Storing data
  - Retrieving data from other registers
  - Shifting data within the register (right/left)

Simple Register

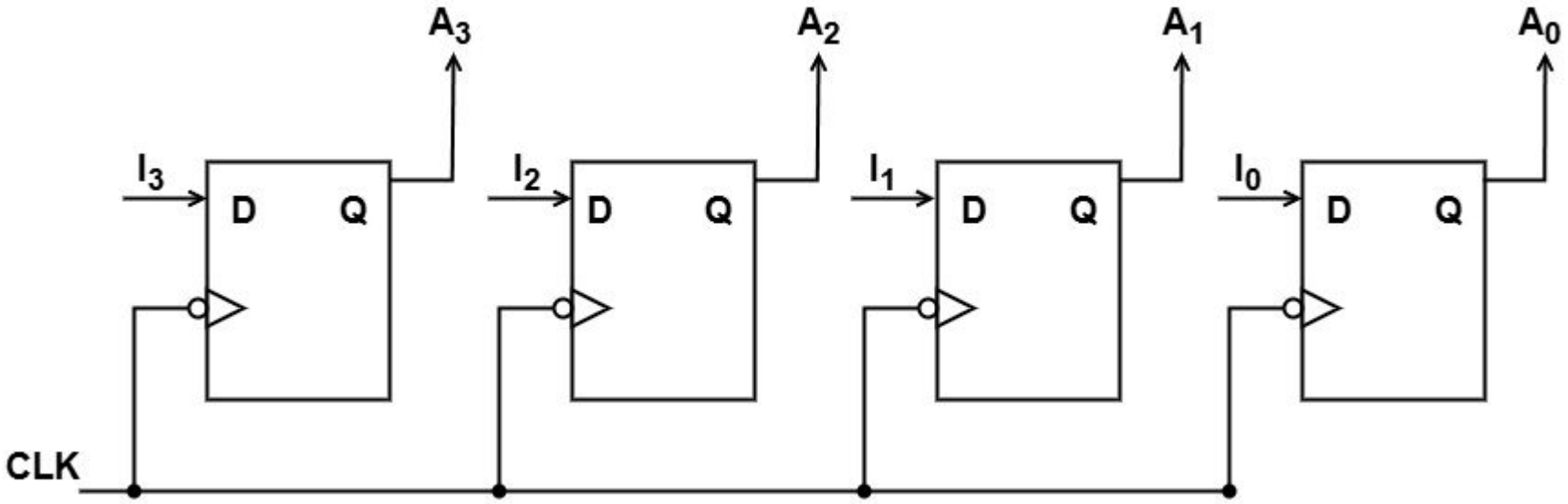

- Example: A simple 4-bit register, consist of D flip-flops which does not contain any logic gate or other components. New 4-bit data is stored with every clock cycle.

What is Memory Unit?

A **memory unit** is a **collection of registers together** with associated circuits needed to transfer information in and out of registers.

Binary cell: An elementary unit of **computer storage** (i.e. memory register) that can have one or the other of **two stable states** and can thus **store one bit of information.**

The memory cell is an electronic circuit that stores one bit of binary information and it must be set to store a logic 1 (high voltage level) and reset to store a logic 0 (low voltage level). Its value is maintained/stored until it is changed by the set/reset process.

What is Memory Unit?

A memory unit stores binary information in groups of bits called *words.*

Communication between memory unit and its environment is achieved through **2 controls**(read and write) and **2 external registers** (memory address register and memory buffer register).

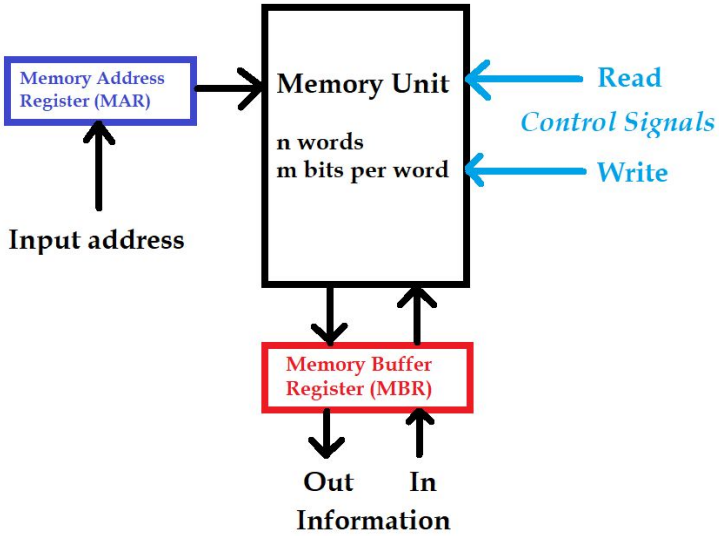

What is Memory Unit?

To communicate with a memory word, its address is transferred to **memory address register**. Internal circuit then opens the path to select that word. A **n**-bit address register can specify up to 2^n address. (note: # of address=# of word)

Before writing and after reading information are kept in **Memory Buffer register**. In each case, the address register specifies location of writing or reading.

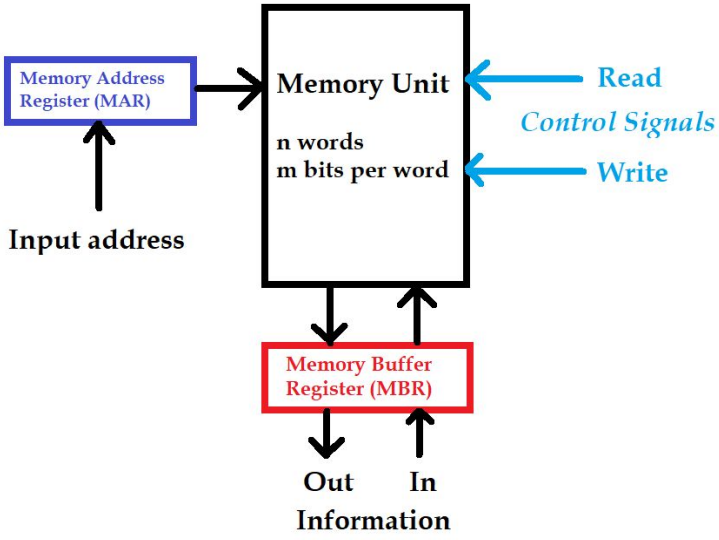

READ Operation Example

MAR

0010 1010

Input Address = 42

Memory Unit	
0	0101 0101
1	0000 0000
...	...
41	0011 0011
42	0110 1110
...	...
255	0000 0000

Read = 1

Write = 0

MBR

0110 1110

WRITE Operation Example

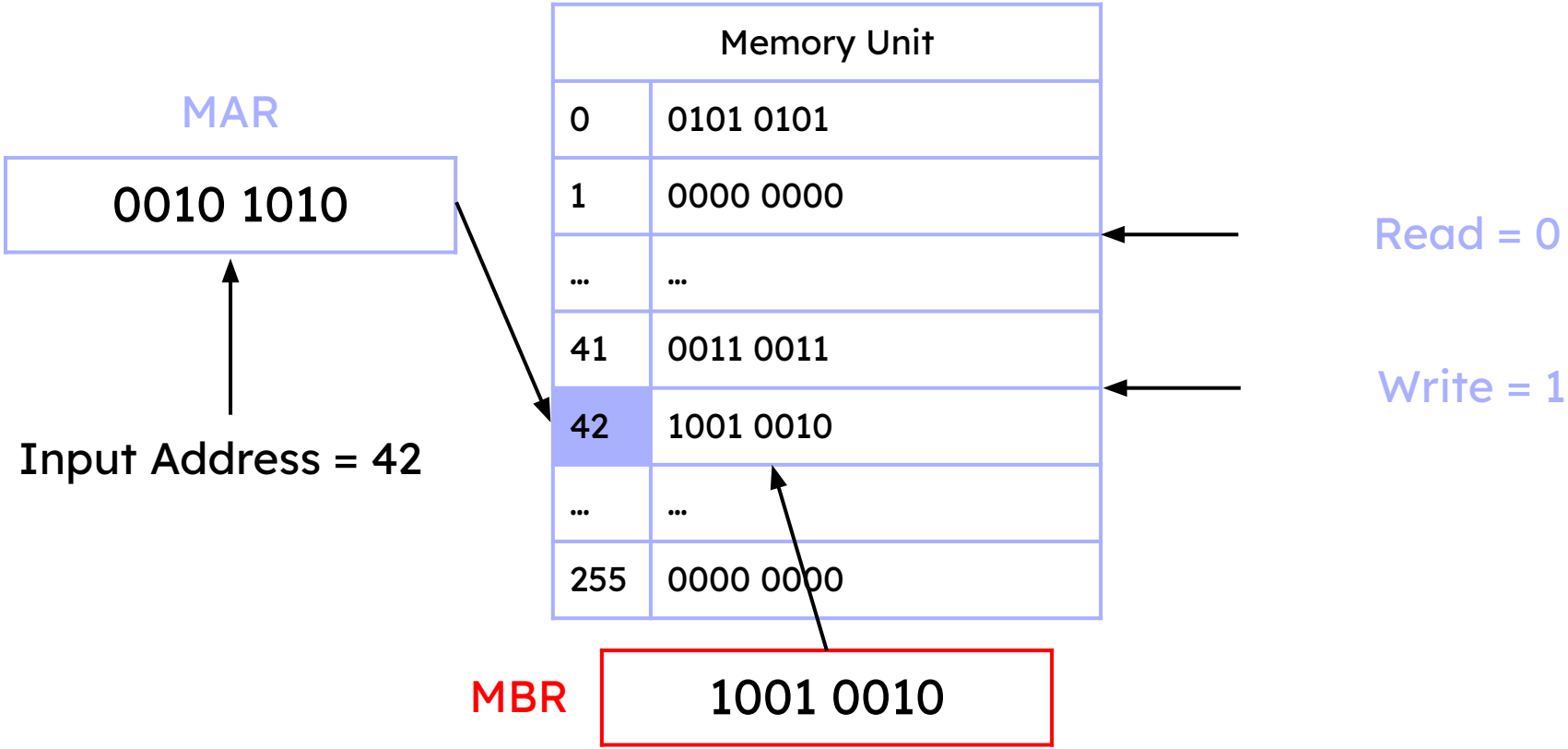

Content of a Memory

Content of a 1024 x 16-bit memory:

Memory address		Memory content
binary	decimal	
0000000000	0	1011010111011101
0000000001	1	1010000110000110
0000000010	2	0010011101110001
:	:	:
:	:	:
1111111101	1021	1110010101010010
1111111110	1022	0011111010101110
1111111111	1023	1011000110010101

Types of Semiconductor Memories

ROM – Read Only Memory - a type of memory that cannot be written, can only be read. Contents determined during the manufacture time

RAM – Random Access Memory

Memory that can be both read and written during normal operation.

- Contents are volatile, i.e.will be lost on power off.
- Two types of RAM:
  - Static RAM (SRAM)
  - Dynamic RAM (DRAM)

Random Access Memory (RAM)

The data consists of n lines (for n-bit words). Data input lines provide the information to be stored (*written*) into the memory, while data output lines carry the information out (read) from the memory.

The address consists of k lines which specify which word (among the 2^k words available) to be selected for reading or writing.

Random Access Memory (RAM)

The control lines *Read* and *Write* (usually combined into a single control line *Read/Write*) specifies the direction of transfer of the data.

Example: A memory unit of 1024 words with 8 bit/word needs, 10 address line (i.e. address register must contain 10 FF) and buffer register must have 8 FF to store words transferred in and out of it.

Random Access Memory (RAM)

Block diagram of a memory unit:

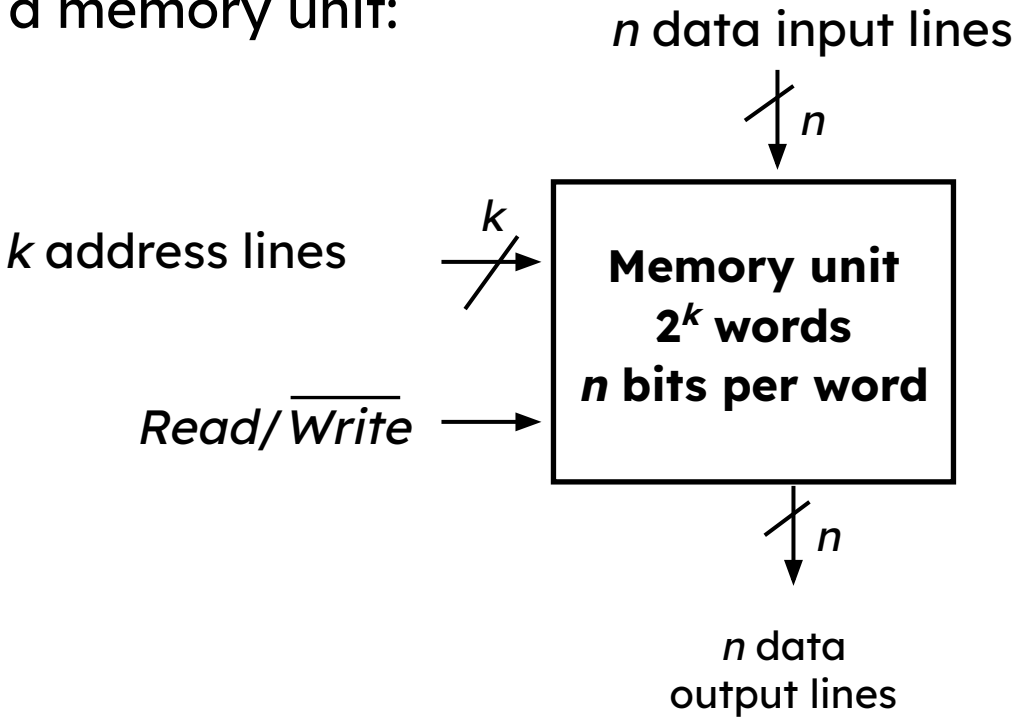

Block Diagram of 16x1 RAM [no need to memorize]

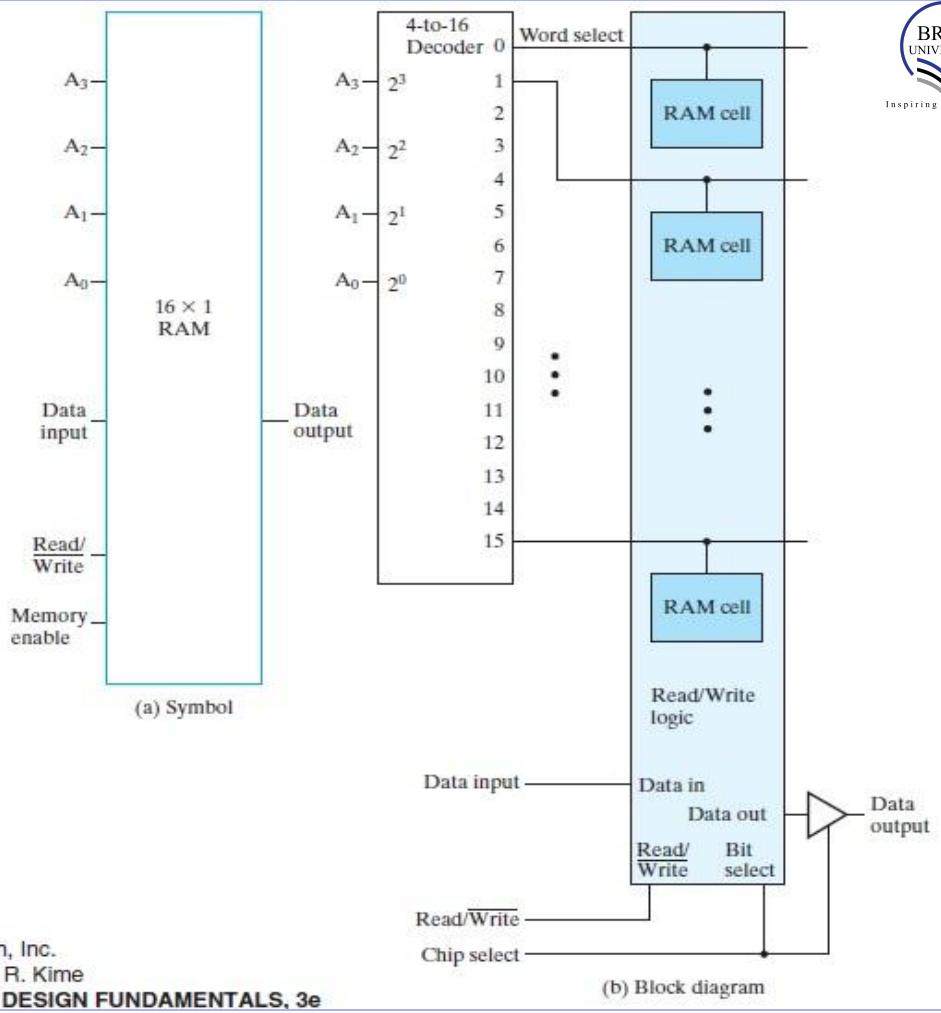

© 2004 Pearson Education, Inc.
M. Morris Mano & Charles R. Kime
LOGIC AND COMPUTER DESIGN FUNDAMENTALS, 3e

Random Access Memory (RAM)

The Write operation:

- Transfers the address of the desired word to the address lines
- Transfers the data bits (the word) to be stored in memory to the data input lines
- Activates the *Write* control line (set *Read*/$\overline{Write}$ to 0)

The Read operation:

- Transfers the address of the desired word to the address lines
- Activates the *Read* control line (set *Read*/$\overline{Write}$ to 1)

Random Access Memory (RAM)

The Read/Write operation:

Memory Enable	Read/Write	Memory Operation
0	X	None
1	0	Write to selected word
1	1	Read from selected word

Two types of RAM

Static RAM **(SRAM)**:

- Uses flip-flops as the memory cells, Complex Circuitry.
- No need to refresh constantly
- Typically the type of RAM used primarily as **cache memory**.

Dynamic RAM **(DRAM)**:

- Use capacitor charges to represent datas.
- Though simpler in circuitry, they have to be constantly refreshed.
- Most **main memory** is dynamic RAM

Two types of RAM [Cont.]

Dynamic RAM:

- **SDRAM –** Synchronous dynamic RAM – operates synchronously with system clock and data bus. Can handle 100MHz to >800MHz.
- **DDR – D**ouble **D**ata **R**ate – can transmit data on both edges of the clock. **DDR3** = **D**ouble **D**ata **R**ate **3**rd generation.
- **QDR – Q**uad **D**ata **R**ate – twice as fast as DDR

Typically we use DDR3, DDR4 & DDR5 RAM as main memory in our windows PC and Static RAM for L1, L2 and L3 cache memory.

Memory Size

Memory sizes might be specified in bits or byte(=8bit)
Symbol: Bytes (B) and bits(b)
Example,

2^{28} b
$= 2^{28}/8$ B
$= 2^{28}/2^{3}$ B
$= 2^{25}$ B
$= 2^{5}*2^{20}$ B
= 32 MB

	Prefix	Base 2	Base 10
K	Kilo	2^{10} = 1024	10^{3}=1,000
M	Mega	2^{20} = 1,048,576	10^{6}=1,000,000
G	Giga	2^{30} = 1,073,741,824	10^{9}=1,000,000,000

1 Byte = 8 Bits
1 KB = 1024 Bytes
1 MB = 1024 KB
1 GB = 1024 MB
1 TB = 1024 GB
1 PB = 1024 TB
1 EB = 1024 PB

2 formulas to remember

Capacity = no. of word x bit/word

No. of word= 2 ^ (address lines)

Therefore,

Capacity = 2^(address lines) x bit/word

Test yourself

Capacity = no. of word x bit/word

No. of word= 2 ^ (address lines)

What is the total capacity of a 2^{16} x 16 memory?

Test yourself [Sol^n]

What is the total capacity of a 2^{16} x 16 memory:

Solution:

= 2^16 x 16 bits/words

= 1048576 bits

= 1048576/8 bytes

= 131072 bytes

= 131072/1024 KB

= 128 KB

Test yourself

Capacity = no. of word x bit/word

No. of word= 2 ^ (address lines)

How many address lines do we need for a 64 MB RAM with 32 bit words?

Test yourself [Sol^n]

How many address lines do we need for a 64 MB RAM with 32 bit words:

Solution:
Formula:
Capacity = no. of word x bit/word
64MB = no. of word x 32 bits/word
no. of word = 64MB / 32 bits/word
= (64x1024x1024x8)/32 [1 byte = 2^3 bits]
= 16777216
= 2^24 [$\log_2(16777216) = 24$]

no. of address lines = 24

Binary cell

- Must be small so that many binary cell (BC) can fit in a small area
- Select input enable cell for reading/writing
- Read/write determines operation to be performed on cell. A **1 in read/write** input forms a path to the output terminal. A **0 in read/write input**, information in the input terminal is transferred into the FF

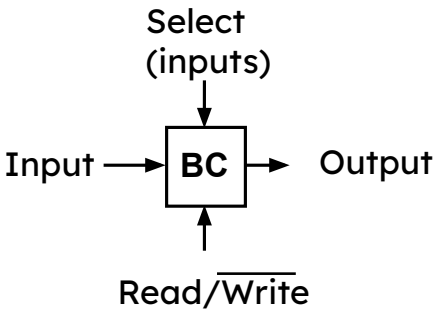

Random Access Memory (RAM)

of word

Bit/word

- Logic construction of a 4 x 3 RAM (with decoder and OR gates):

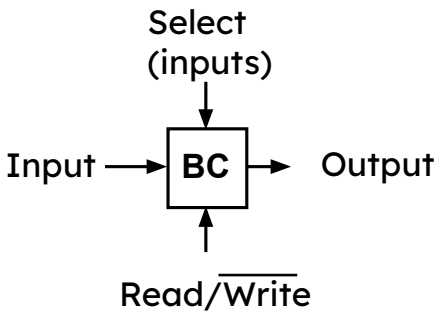

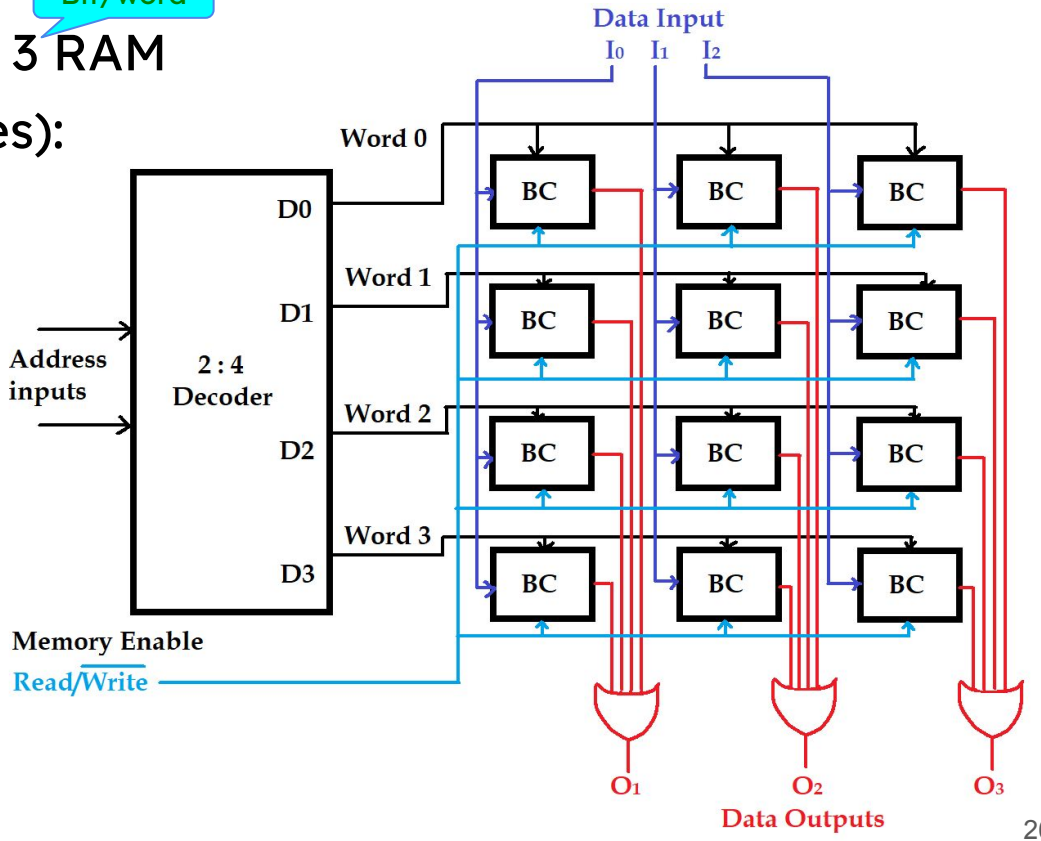

Since no of word is 4, that would be equivalent to the decoder's output. Since, the decoder will have 4 outputs, so we should use a 2x4 decoder

Random Access Memory (RAM)

of word

Bit/word

Logic construction of a 2048 x 32 RAM (with decoder and OR gates):

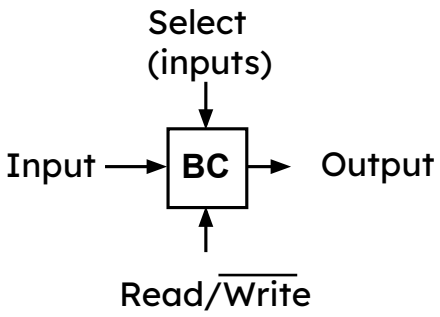

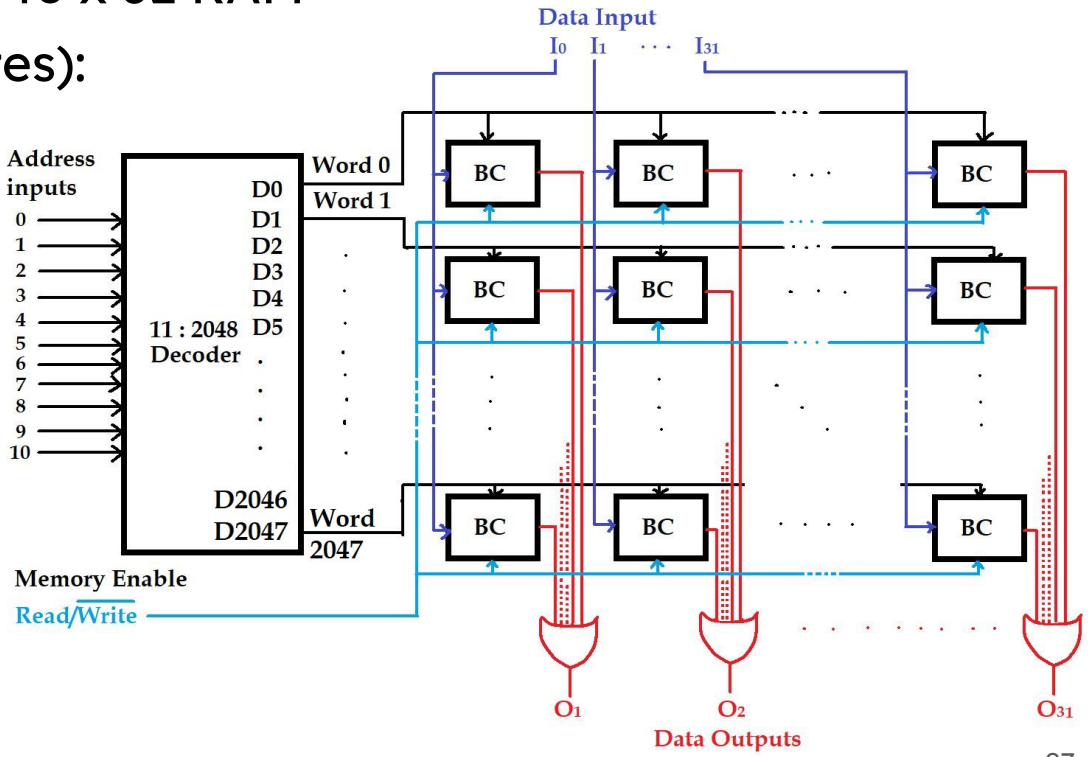

Since no of word is 2048, that would be equivalent to the decoders output. Since, the decoder will have 2048 outputs, so we should use a 11x2048 decoder

Random Access Memory (RAM)

- An array of RAM chips: memory chips are combined to form larger memory.
- A 1K x 8-bit RAM chip:

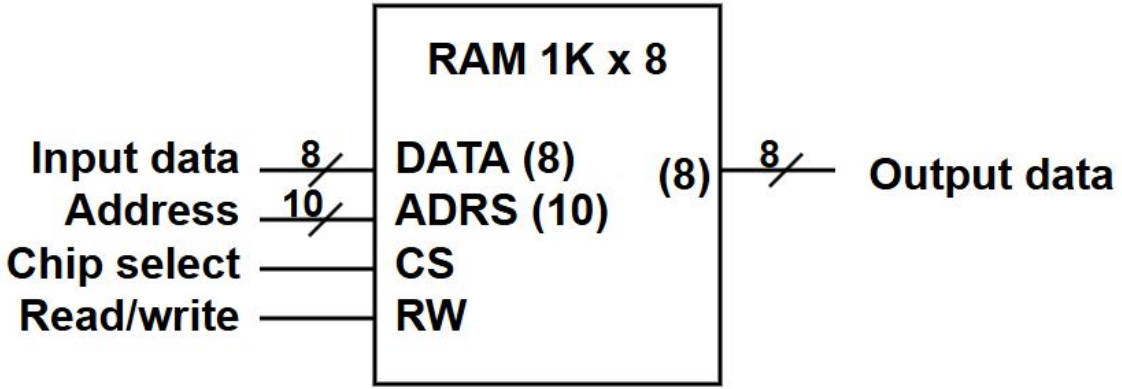

Block diagram of a 1K x 8 RAM chip

Hierarchy of Memory [Self Study-not important for CSE260 exam]

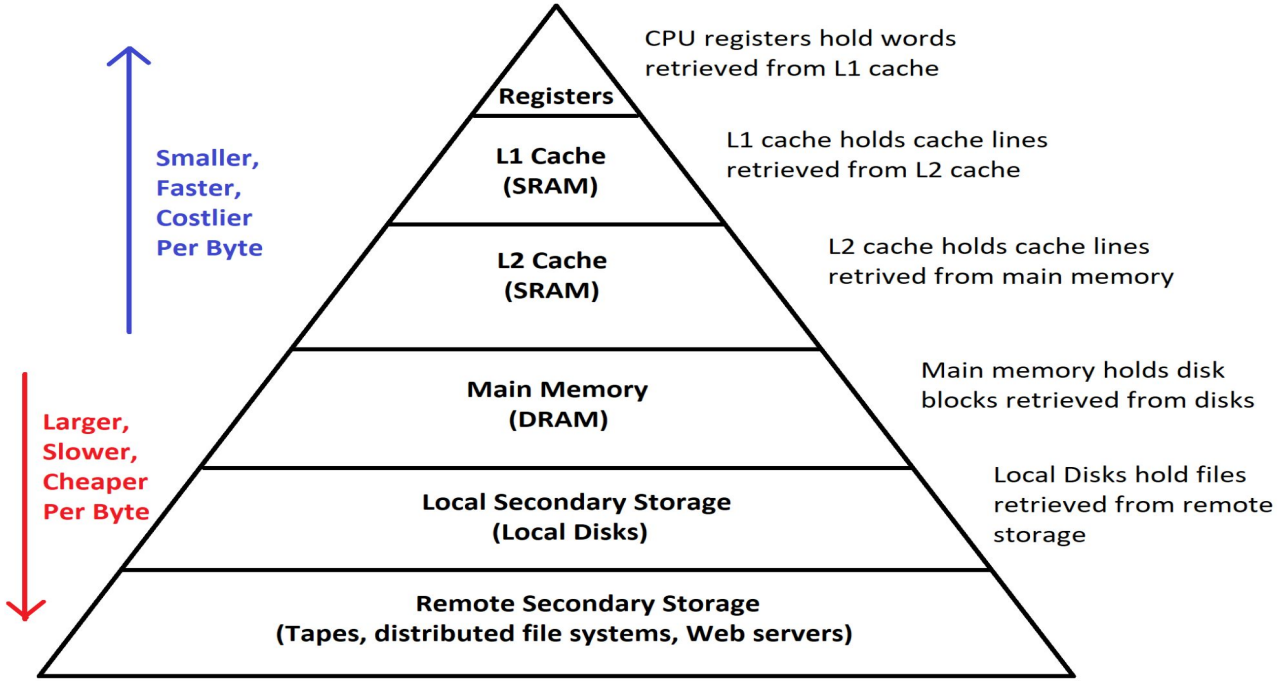

Check your PC's RAM Specifications From Task Manager (Windows) [Self Study-not important for CSE260 exam]

Main Memory: Dynamic RAM

Local Secondary Storage

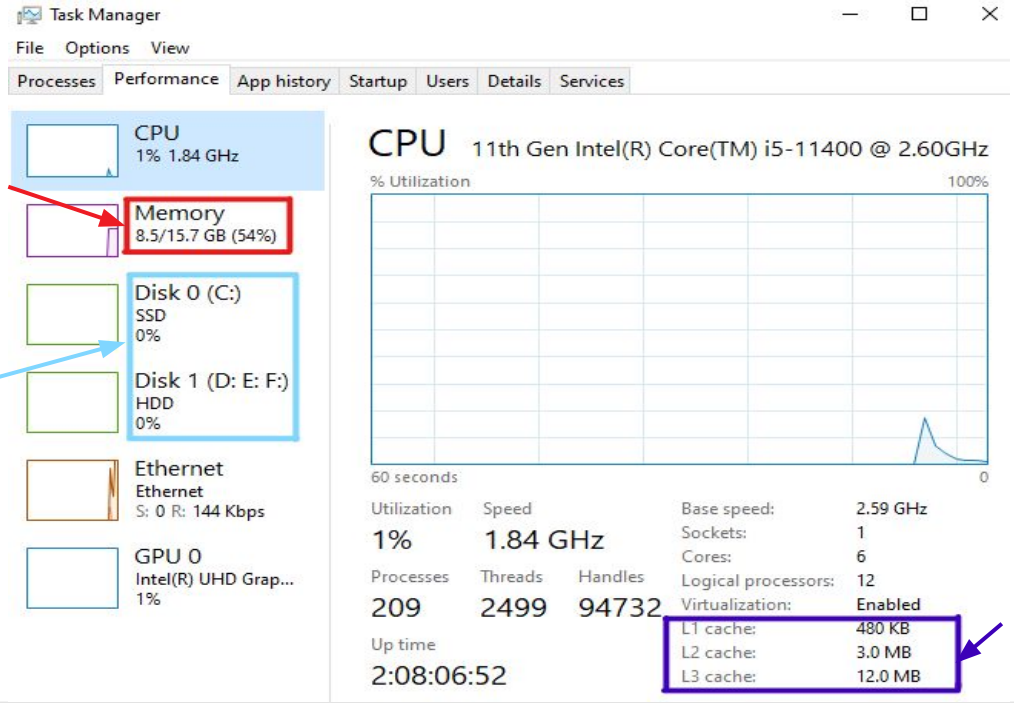

Cache Memory Static RAM